SL28504-2

Clock Generator for Intel® Eaglelake Chipset

Features

- Compliant to Intel® CK505
- Low power push-pull type differential output buffers
- Integrated voltage regulator
- Integrated resistors on differential clocks
- Scalable low voltage VDD_IO (3.3V to 1.05V)
- Differential CPU clocks with selectable frequency
- 100 MHz Differential SRC clocks
- 96 MHz Differential DOT clock
- 48 MHz USB clocks
- 33 MHz PCI clock
- 25MHz Free run for WOL
- Selectable 25MHz/24.576MHz output
- Buffered Reference Clock 14.318 MHz
- Low-voltage frequency select input
- I^2C support with readback capabilities
- Triangular Spread Spectrum profile for maximum electromagnetic interference (EMI) reduction
- 3.3V Power supply
- 56-pin TSSOP packages

CPU	SRC	PCI	REF	DOT96	USB_48	24.576M	25M
x2 / x3	x8/x11	x6	x 2	x 1	x1	x1	x2

Block Diagram

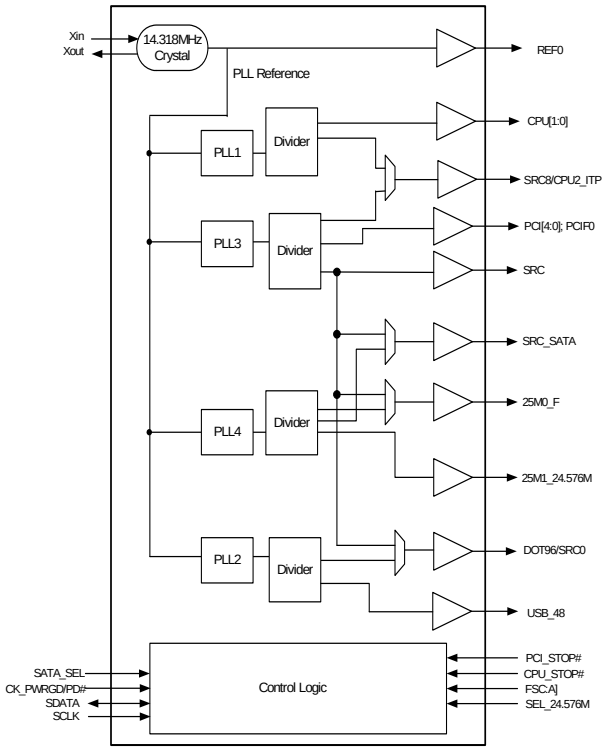

Pin Configuration

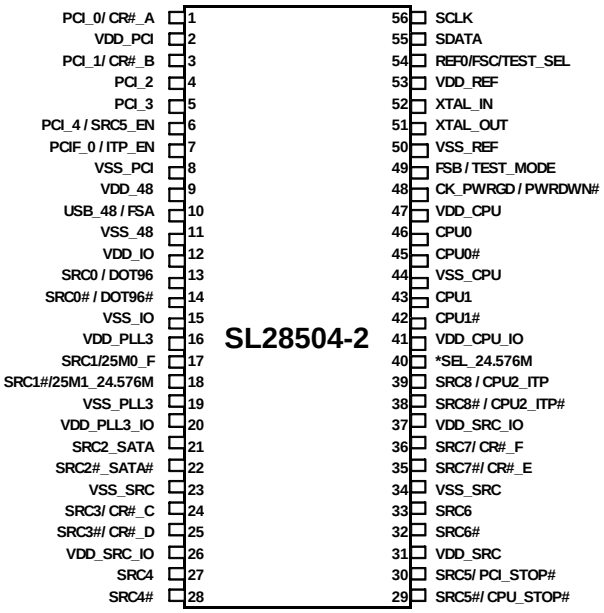

* Internal Pull-Down

400 West Cesar Chavez, Austin, TX 78701 1+(512) 416-8500 1+(512) 416-9669 www.silabs.com

56-TSSOP Pin Definitions

Pin No.	Name	Type	Description
1	PCI_0/ CR#_A	I/O, SE	33 MHz clock/3.3V CR# Input mappable via I2C to control either SRC 0 or SRC 2. Default PCI_0
2	VDD_PCI	PWR	3.3V Power supply for PCI PLL.
3	PCI_1/ CR#_B	I/O, SE	33 MHz clock/3.3V CR# Input mappable via I2C to control either SRC 1 or SRC 4. Default PCI_1.
4	PCI_2	O, SE	33 MHz clock.
5	PCI_3	O, SE,	33 MHz clock.
6	PCI4 /SRC5_EN	I/O, SE	33 MHz clock output/3.3V-tolerant input for SRC enable (Sampled on CKPWRGD assertion) 1 = SRC5, 0 =CPU_STOP#/PCI_STOP#
7	PCIF_0/ITP_EN	I/O, SE	3.3V LVTTL input to enable SRC8 or CPU2_ITP/33 MHz clock output. (sampled on the CK_PWRGD assertion) 1 = CPU2_ITP, 0 = SRC8
8	VSS_PCI	GND	Ground for outputs.
9	VDD_48	PWR	3.3V Power supply for outputs and PLL.
10	USB_48/FSA	I/O	3.3V tolerant input for CPU frequency selection/fixed 48 MHz clock output. *Refer to DC Electrical Specifications table for Vil_FS and Vih_FS specifications.*
11	VSS_48	GND	Ground for outputs.
12	VDD_IO	PWR	3.3V-1.05V Power supply for outputs.
13	SRC0/DOT96T	O, DIF	100 MHz Differential serial reference clocks/Fixed 96 MHz clock output. Selected via I2C default is SRC0.
14	SRC0#/DOT96#	O, DIF	100 MHz Differential serial reference clocks/Fixed 96 MHz clock output. Selected via I2C default is SRC0.
15	VSS_IO	GND	Ground for PLL2.
16	VDD_PLL3	PWR	3.3V Power supply for PLL3
17	SRC1/25M0_F	O, SE	100 MHz Differential serial reference clocks/ Free run 25MHz clock output
18	SRC1#/25M1_24.576M	O, SE	100 MHz Differential serial reference clocks/ 25MHz clock output/24.576MHz clock output
19	VSS_PLL3	GND	Ground for PLL3.
20	VDD_PLL3_IO	PWR	3.3V-1.05V power supply for PLL3
21	SRC2_SATA	O, DIF	100 MHz Differential serial reference clocks.
22	SRC2#_SATA#	O, DIF	100 MHz Differential serial reference clocks.
23	VSS_SRC	GND	Ground for outputs.
24	SRC3/ CR#_C	I/O, Dif	100-MHz Differential serial reference clocks / 3.3V CR#_C, input, mappable via I2C to control either SRC 0 or SRC 2. Default SRC3
25	SRC3#/ CR#_D	I/O, Dif	100-MHz Differential serial reference clocks / 3.3V CR#_D input, mappable via I2C to control either SRC 1 or SRC 4. Default SRC3
26	VDD_SRC_IO	PWR	3.3V-1.05V power supply for SRC outputs.
27	SRC4	O, DIF	100 MHz Differential serial reference clocks.
28	SRC4#	O, DIF	100 MHz Differential serial reference clocks.
29	CPU_STOP#/SRC5#	I/O, Dif	3.3V tolerant input for stopping CPU outputs./100 MHz Differential serial reference clocks. The option is selected by SRC5_EN
30	PCI_STOP#/SRC5	I/O, Dif	3.3V tolerant input for stopping PCI and SRC outputs./100 MHz Differential serial reference clocks.The option is selected by SRC5_EN
31	VDD_SRC	PWR	3.3V Power supply for SRC PLL.

56-TSSOP Pin Definitions

Pin No.	Name	Type	Description
32	SRC6#	O, DIF	100 MHz Differential serial reference clocks.
33	SRC6	O, DIF	100 MHz Differential serial reference clocks.
34	VSS_SRC	GND	Ground for outputs.
35	SRC7#/ CR#_E	I/O, Dif	100 MHz Differential serial reference clocks/3.3V CR#_E Input controlling SRC6. Default SRC7.
36	SRC7/ CR#_F	I/O, Dif	100 MHz Differential serial reference clocks/3.3V OE#8 Input controlling SRC8. Default SRC7.
37	VDD_SRC_IO	PWR	3.3V-1.05V power supply for SRC outputs.
38	SRC8#/CPUC2_ITP#	O, DIF	Selectable differential CPU or SRC clock output. ITP_EN = 0 @ CK_PWRGD assertion = SRC8 ITP_EN = 1 @ CK_PWRGD assertion = CPU2 *Note: CPU2 is an iAMT clock in iAMT mode depending on the configuration set in Byte 11 Bit3:2.*
39	SRC8/CPUT2_ITP	O, DIF	Selectable differential CPU or SRC clock output. ITP_EN = 0 @ CK_PWRGD assertion = SRC8 ITP_EN = 1 @ CK_PWRGD assertion = CPU2 *Note: CPU2 is an iAMT clock in iAMT mode depending on the configuration set in Byte 11 Bit3:2.*
40	SEL_24.576M	I, PD	Select 25M1_24.576M output and SRC1 0 = 25M1, M= SRC1, 1 = 24.576M
41	VDD_CPU_IO	PWR	3.3V-1.05V power supply for CPU outputs.
42	CPU1#	O, DIF	Differential CPU clock outputs. *Note: CPU1 is an iAMT clock in iAMT mode depending on the configuration set in Byte 11 Bit3:2.*
43	CPU1	O, DIF	Differential CPU clock outputs. *Note: CPU1 is an iAMT clock in iAMT mode depending on the configuration set in Byte 11 Bit3:2.*
44	VSS_CPU	GND	Ground for outputs.
45	CPU0#	O, DIF	Differential CPU clock outputs.
46	CPU0	O, DIF	Differential CPU clock outputs.
47	VDD_CPU	PWR	3.3V Power supply for CPU PLL.
48	CK_PWRGD/PWRDWN#	I	3.3V LVTTL input. This pin is a level sensitive strobe used to latch the FS_A, FS_B, FS_C, and ITP_EN. After CK_PWRGD (active HIGH) assertion, this pin becomes a real-time input for asserting power down (active LOW).
49	FSB/TEST_MODE	I	3.3V tolerant input for CPU frequency selection. Selects Ref/N or Tri-state when in test mode 0 = Tri-state, 1 = Ref/N. *Refer to DC Electrical Specifications table for Vil_FS and Vih_FS specifications.*
50	VSS_REF	GND	Ground for outputs.
51	XTAL_OUT	O, SE	14.318 MHz Crystal output.
52	XTAL_IN	I	14.318 MHz Crystal input.
53	VDD_REF	PWR	3.3V Power supply for outputs and also maintains SMBUS registers during power-down.
54	REF0/FSC/TEST_SEL	I/O	3.3V tolerant input for CPU frequency selection/fixed 14.318 clock output. Selects test mode if pulled to V_{IHFS_C} when CK_PWRGD is asserted HIGH. *Refer to DC Electrical Specifications table for* V_{ILFS_C}, V_{IMFS_C}, V_{IHFS_C} *specifications.*
55	SMB_DATA	I/O	SMBus compatible SDATA.
56	SMB_CLK	I	SMBus compatible SCLOCK.

Frequency Select Pin (FSA, FSB and FSC)

FSC	FSB	FSA	CPU	SRC	PCIF/PCI	REF	DOT96	USB
0	0	0	266 MHz	100 MHz	33 MHz	14.318 MHz	96 MHz	48 MHz
0	0	1	133 MHz					
0	1	0	200 MHz					
0	1	1	166 MHz					
1	0	0	333 MHz					
1	0	1	100 MHz					
1	1	0	400 MHz					
1	1	1	Reserved	Reserved				

Frequency Select Pin (FSA, FSB and FSC)

Apply the appropriate logic levels to FSA, FSB, and FSC inputs before CK-PWRGD assertion to achieve host clock frequency selection. When the clock chip sampled HIGH on CK-PWRGD and indicates that VTT voltage is stable then FSA, FSB, and FSC input values are sampled. This process employs a one-shot functionality and once the CK-PWRGD sampled a valid HIGH, all other FSA, FSB, FSC, and CK-PWRGD transitions are ignored except in test mode

Serial Data Interface

To enhance the flexibility and function of the clock synthesizer, a two-signal serial interface is provided. Through the Serial Data Interface, various device functions, such as individual clock output buffers are individually enabled or disabled. The registers associated with the Serial Data Interface initialize to their default setting at power-up. The use of this interface is optional. Clock device register changes are normally made at system initialization, if any are required. The interface cannot be used during system operation for power management functions.

Data Protocol

The clock driver serial protocol accepts byte write, byte read, block write, and block read operations from the controller. For block write/read operation, Access the bytes in sequential order from lowest to highest (most significant bit first) with the ability to stop after any complete byte is transferred. For byte write and byte read operations, the system controller can access individually indexed bytes. The offset of the indexed byte is encoded in the command code described in *Table 1*.

The block write and block read protocol is outlined in *Table 2* while *Table 3* outlines byte write and byte read protocol. The slave receiver address is 11010010 (D2h)

Table 1. Command Code Definition

Bit	Description
7	0 = Block read or block write operation, 1 = Byte read or byte write operation
(6:0)	Byte offset for byte read or byte write operation. For block read or block write operations, these bits should be '0000000'

Table 2. Block Read and Block Write Protocol

Block Write Protocol		Block Read Protocol	
Bit	**Description**	**Bit**	**Description**
1	Start	1	Start
8:2	Slave address–7 bits	8:2	Slave address–7 bits
9	Write	9	Write
10	Acknowledge from slave	10	Acknowledge from slave
18:11	Command Code–8 bits	18:11	Command Code–8 bits
19	Acknowledge from slave	19	Acknowledge from slave
27:20	Byte Count–8 bits (Skip this step if I^2C_EN bit set)	20	Repeat start
28	Acknowledge from slave	27:21	Slave address–7 bits
36:29	Data byte 1–8 bits	28	Read = 1
37	Acknowledge from slave	29	Acknowledge from slave
45:38	Data byte 2–8 bits	37:30	Byte Count from slave–8 bits

Table 2. Block Read and Block Write Protocol (continued)

Block Write Protocol		Block Read Protocol	
Bit	**Description**	**Bit**	**Description**
46	Acknowledge from slave	38	Acknowledge
....	Data Byte /Slave Acknowledges	46:39	Data byte 1 from slave–8 bits
....	Data Byte N–8 bits	47	Acknowledge
....	Acknowledge from slave	55:48	Data byte 2 from slave–8 bits
....	Stop	56	Acknowledge
		....	Data bytes from slave / Acknowledge
		....	Data Byte N from slave–8 bits
		....	NOT Acknowledge
		....	Stop

Table 3. Byte Read and Byte Write Protocol

Byte Write Protocol		Byte Read Protocol	
Bit	**Description**	**Bit**	**Description**
1	Start	1	Start
8:2	Slave address–7 bits	8:2	Slave address–7 bits
9	Write	9	Write
10	Acknowledge from slave	10	Acknowledge from slave
18:11	Command Code–8 bits	18:11	Command Code–8 bits
19	Acknowledge from slave	19	Acknowledge from slave
27:20	Data byte–8 bits	20	Repeated start
28	Acknowledge from slave	27:21	Slave address–7 bits
29	Stop	28	Read
		29	Acknowledge from slave
		37:30	Data from slave–8 bits
		38	NOT Acknowledge
		39	Stop

Control Registers

Byte 0: Control Register 0

Bit	@Pup	Name	Description
7	HW	FS_C	CPU Frequency Select Bit, set by HW
6	HW	FS_B	CPU Frequency Select Bit, set by HW
5	HW	FS_A	CPU Frequency Select Bit, set by HW
4	0	iAMT_EN	Set via SMBus or by combination of PWRDWN, CPU_STP, and PCI_STP 0 = Legacy Mode, 1 = iAMT Enabled
3	0	Reserved	Reserved
2	0	Reserved	Reserved
1	0	SATA_SEL	Select source of SATA clock 0 =PLL3, 1= PLL4
0	1	PD_Restore	Save Config. In powerdown 0 = Config. Cleared, 1 = Config. Saved

Byte 1: Control Register 1

Bit	@Pup	Name	Description
7	0	SRC0_SEL	Select for SRC0 or DOT96 0 = SRC0, 1 = DOT96
6	0	PLL1_SS_DC	Select for down or center SS 0 = Down spread, 1 = Center spread
5	0	PLL3_SS_DC	Select for down or center SS 0 = Down spread, 1 = Center spread
4	0	Reserved	Reserved
3	0	Reserved	Reserved
2	0	Reserved	Reserved
1	1	Reserved	Reserved
0	1	PCI_SEL	Select source of PCI clocks 0=PLL1, 1=PLL3

Byte 2: Control Register 2

Bit	@Pup	Name	Description
7	1	REF0_OE	Output enable for REF0 0 = Output Disabled, 1 = Output Enabled
6	1	USB48_OE	Output enable for USB48 0 = Output Disabled, 1 = Output Enabled
5	1	PCIF0_OE	Output enable for PCIF5 0 = Output Disabled, 1 = Output Enabled
4	1	PCI4_OE	Output enable for PCI4 0 = Output Disabled, 1 = Output Enabled
3	1	PCI3_OE	Output enable for PCI3 0 = Output Disabled, 1 = Output Enabled
2	1	PCI2_OE	Output enable for PCI2 0 = Output Disabled, 1 = Output Enabled
1	1	PCI1_OE	Output enable for PCI1 0 = Output Disabled, 1 = Output Enabled
0	1	PCI0_OE	Output enable for PCI0 0 = Output Disabled, 1 = Output Enabled

Byte 3: Control Register 3

Bit	@Pup	Name	Description
7	1	Reserved	Reserved
6	1	Reserved	Reserved
5	1	Reserved	Reserved
4	1	SRC8/CPU2_ITP_OE	Output enable for SRC8 or CPU2_ITP 0 = Output Disabled, 1 = Output Enabled
3	1	SRC7_OE	Output enable for SRC7 0 = Output Disabled, 1 = Output Enabled
2	1	SRC6_OE	Output enable for SRC6 0 = Output Disabled, 1 = Output Enabled
1	1	RESERVED	RESERVED
0	1	SRC4_OE	Output enable for SRC4 0 = Output Disabled, 1 = Output Enabled

Byte 4: Control Register 4

Bit	@Pup	Name	Description
7	1	SRC3_OE	Output enable for SRC3 0 = Output Disabled, 1 = Output Enabled
6	1	SRC2_SATA_OE	Output enable for SRC2_SATA 0 = Output Disabled, 1 = Output Enabled
5	1	SRC1_OE	Output enable for SRC1 0 = Output Disabled, 1 = Output Enabled
4	1	SRC0/DOT96_OE	Output enable for SRC0/DOT96 0 = Output Disabled, 1 = Output Enabled
3	1	CPU1_OE	Output enable for CPU1 0 = Output Disabled, 1 = Output Enabled
2	1	CPU0_OE	Output enable for CPU0 0 = Output Disabled, 1 = Output Enabled
1	1	PLL1_SS_EN	Enable PLL1s spread modulation, 0 = Spread Disabled, 1 = Spread Enabled
0	1	PLL3_SS_EN	Enable PLL3s spread modulation 0 = Spread Disabled, 1 = Spread Enabled

Byte 5: Control Register 5

Bit	@Pup	Name	Description
7	0	CR#_A_EN	Enable CR#_A (clk req) 0 = Disabled, 1 = Enabled,
6	0	CR#_A_SEL	Set CR#_A → SRC0 or SRC2 0 = CR#_A→SRC0, 1 = CR#_A→SRC2
5	0	CR#_B_EN	Enable CR#_B(clk req) 0 = Disabled, 1 = Enabled,
4	0	CR#_B_SEL	Set CR#_B → SRC1 or SRC4 0 = CR#_B→SRC1, 1 = CR#_B→SRC4
3	0	CR#_C_EN	Enable CR#_C (clk req) 0 = Disabled, 1 = Enabled
2	0	CR#_C_SEL	Set CR#_C → SRC0 or SRC2 0 = CR#_C→SRC0, 1 = CR#_C→SRC2

Byte 5: Control Register 5 (continued)

Bit	@Pup	Name	Description
1	0	CR#_D_EN	Enable CR#_D (clk req) 0 = Disabled, 1 = Enabled
0	0	CR#_D_EN	Enable CR#_D (clk req) 0 = Disabled, 1 = Enabled

Byte 6: Control Register 6

Bit	@Pup	Name	Description
7	0	CR#_E_EN	Enable CR#_E (clk req) → SRC6 0 = Disabled, 1 = Enabled
6	0	CR#_F_EN	Enable CR#_F (clk req) → SRC8 0 = Disabled, 1 = Enabled
5	0	Reserved	Reserved
4	0	Reserved	Reserved
3	0	Reserved	Reserved
2	0	Reserved	Reserved
1	0	Reserved	Reserved
0	0	SRC_STP_CTRL	Allows control of SRC with assertion of PCI_STOP# 0 = Free running SRC 1 = Stopped with PCI_STOP#

Byte 7: Vendor ID

Bit	@Pup	Name	Description
7	0	Rev Code Bit 3	Revision Code Bit 3
6	0	Rev Code Bit 2	Revision Code Bit 2
5	0	Rev Code Bit 1	Revision Code Bit 1
4	1	Rev Code Bit 0	Revision Code Bit 0
3	1	Vendor ID bit 3	Vendor ID Bit 3
2	0	Vendor ID bit 2	Vendor ID Bit 2
1	0	Vendor ID bit 1	Vendor ID Bit 1
0	0	Vendor ID bit 0	Vendor ID Bit 0

Byte 8: Control Register 8

Bit	@Pup	Name	Description
7	0	Device_ID3	0000 = 56-TSSOP 0001 = 64-TSSOP 0010 = Reserved 0011 = 56-QFN 0100 = 64-QFN 0101 = Reserved 0110 = Reserved 0111 = 56-SSOP 1000 = Reserved 1001 = Reserved 1010 = Reserved 1011 = Reserved 1100 = Reserved 1101 = Reserved 1110 = Reserved 1111 = Reserved
6	0	Device_ID2	
5	0	Device_ID1	
4	0	Device_ID0	
3	0	Reserved	Reserved

Byte 8: Control Register 8 (continued)

Bit	@Pup	Name	Description
2	0	Reserved	Reserved
1	1	25M0_F_OE	Output enable for 25M0_F 0 = Output Disabled, 1 = Output Enabled
0	1	25M1_24.576M_OE	Output enable for 25M1_24.576M 0 = Output Disabled, 1 = Output Enabled

Byte 9: Control Register 9

Bit	@Pup	Name	Description
7	0	PCIF5_STP_CTRL	Allows control of PCIF5 with assertion of PCI_STOP# 0 = Free running PCIF, 1 = Stopped with PCI_STOP#
6	0	Reserved	Reserved
5	1	REF Bit1	REF drive strength Setting 1 of 3 *(see Byte 13 and 14 for more settings)* 0 = Low, 1 = High
4	0	Reserved	Reserved
3	0	TEST_MODE_ENTRY	Allows entry into test mode 0 = Normal Operation, 1 = Enter test mode(s)
2	1	I2C_VOUT<2>	I2C_VOUT[2:0] 000 = 0.30V 001 = 0.40V 010 = 0.50V 011 = 060V 100 = 0.70V 101 = 0.80V (default) 110 = 0.90V 111 = 1.00V
1	0	I2C_VOUT<1>	
0	1	I2C_VOUT<0>	

Byte 10: Control Register 10

Bit	@Pup	Name	Description
7	HW	SRC5_EN	SRC5_EN latche status 0= CPU_STP#/PCI_STP#; 1= SRC5
6	0	Reserved	Reserved
5	0	Reserved	Reserved
4	0	Reserved	Reserved
3	0	Reserved	Reserved
2	0	Reserved	Reserved
1	1	CPU1_STP_CTRL	Enable CPU_STOP# control of CPU1 0 = Free running, 1= Stoppable
0	1	CPU0_STP_CTRL	Enable CPU_STOP# control of CPU0 0 = Free running, 1= Stoppable

Byte 11: Control Register 11

Bit	@Pup	Name	Description
7	0	Reserved	Reserved
6	0	Reserved	Reserved
5	1	25M0_F	25M0_F Output Enabled applies to Powerdown / M1 0 = 25MHz disabled in Powerdown / M1 1 = 25MHz enabled in Powerdown / M1; Sticky 1
4	0	Reserved	Reserved

Byte 11: Control Register 11 (continued)

3	0	CPU2_iAMT_EN	
2	1	CPU1_iAMT_EN	
1	0	Reserved	Reserved
0	1	CPU2_STP_CRTL	Allow control of CPU2 with assertion of CPU_STOP# 0 = Free running, 1 = Stopped with CPU_STOP#

PCIF5/ITP_EN	AMT_EN	CPU2_AMT_EN	CPU1_AMT_EN	Description
x	1	0	0	Reserved
x	1	0	1	CPU1 = M1 Clock
1	1	1	0	CPU2 - M1 Clock
1	1	1	1	CPU1 and CPU2 = M1 Clock

Byte 12: Byte Count

Bit	@Pup	Name	Description
7	0	Reserved	Reserved
6	0	Reserved	Reserved
5	0	BC5	Byte count
4	1	BC4	Byte count
3	0	BC3	Byte count
2	0	BC2	Byte count
1	1	BC1	Byte count
0	1	BC0	Byte count

Byte 13: Control Register 13

Bit	@Pup	Name	Description
7	0	PCIF/PCI Bit 2	Drive Strength Control - Bit[2:0] *Note: REF Bit 1 is located in Byte 9 Bit 5*
6	1	PCIF/PCI Bit 1	
5	0	PCIF/PCI Bit 0	
4	0	USB Bit 2	
3	1	USB Bit 1	
2	0	USB Bit 0	
1	0	REF Bit 2	
0	0	REF Bit 0	

	Bit 2 (Various Bytes)	Bit 1 (Various Bytes)	Bit 0 (Various Bytes)	Buffer Strength
	1	1	1	Strongest
	1	1	0	
	1	0	1	
	1	0	0	
	0	1	1	
Default	0	1	0	
	0	0	1	
	0	0	0	Weakest

Byte 14: Control Register 14

Bit	@Pup	Name	Description
7	0	25M_24.576M Bit 2	25M_24.576M Bit 2 drive strength 0 = Low, 1 = High
6	1	25M_24.576M Bit 1	25M_24.576M SE1/SE2 Bit 1 drive strength 0 = Low, 1 = High
5	0	25M_24.576M Bit 0	25M_24.576M Bit 0 drive strength 0 = Low, 1 = High
4	0	RESERVED	RESERVED
3	0	RESERVED	RESERVED
2	1	SATA_SS_EN	Enable SATA spread modulation, 0 = Spread Disabled, 1 = Spread Enabled

Bit	@Pup	Name	Description
1	1	EN_CFG0_SET	By defalult CFG0 pin strap sets the SMBus initial values to select the HW mode. When this bit is written0, subsequent SMBus accesses is the Lathes Open state, can overwrite the CFG0 pin setting into the SMBus bits and set the mode before the M0 state: specifically B0b2, B1b[6,4,3], B9b1, B11b5
0	1	SW_PCI	SW PCI_STP# Function 0 = SW PCI_STP assert, 1 = SW PCI_STP deassert When this bit is set to 0, all STOPPABLE PCI, PCIF and SRC outputs are stopped in a synchronous manner with no short pulses. When this bit is set to 1, all STOPPED PCI, PCIF and SRC outputs are resumed in a synchronous manner with no short pulses.

Byte 15: Control Register 15

Bit	@Pup	Name	Description
7	0	CPU_DAF_N7	If Prog_CPU_EN is set, the values programmed in CPU_DAF_N[8:0] and CPU_DAF_M[6:0] are used to determine the CPU output frequency.
6	0	CPU_DAF_N6	
5	0	CPU_DAF_N5	
4	0	CPU_DAF_N4	
3	0	CPU_DAF_N3	
2	0	CPU_DAF_N2	
1	0	CPU_DAF_N1	
0	0	CPU_DAF_N0	

Byte 16: Control Register 16

Bit	@Pup	Name	Description
7	0	CPU_DAF_N8	See Byte 14 for description
6	0	CPU_DAF_M6	If Prog_CPU_EN is set, the values programmed in CPU_DAF_N[8:0] and CPU_DAF_M[6:0] are used to determine the CPU output frequency.
5	0	CPU_DAF_M5	
4	0	CPU_DAF_M4	
3	0	CPU_DAF_M3	
2	0	CPU_DAF_M2	
1	0	CPU_DAF_M1	
0	0	CPU_DAF_M0	

Byte 17: Control Register 17

Bit	@Pup	Name	Description
7	0	PCI-E_N7	PCI-E Dial-A-Frequency® Bit N7
6	0	PCI-E_N6	PCI-E Dial-A-Frequency Bit N6
5	0	PCI-E_N5	PCI-E Dial-A-Frequency Bit N5
4	0	PCI-E_N4	PCI-E Dial-A-Frequency Bit N4
3	0	PCI-E_N3	PCI-E Dial-A-Frequency Bit N3
2	0	PCI-E_N2	PCI-E Dial-A-Frequency Bit N2
1	0	PCI-E_N1	PCI-E Dial-A-Frequency Bit N1
0	0	PCI-E_N0	PCI-E Dial-A-Frequency Bit N0

Byte 18: Control Register 18

Bit	@Pup	Name	Description

Byte 18: Control Register 18 (continued)

7	0	SMSW_EN	Enable Smooth Switching 0 = Disabled, 1= Enabled
6	0	SMSW_SEL	Smooth switch select 0 = PLL1, 1 = PLL3
5	0	Prog_PCI-E_EN	Programmable PCI-E frequency enable 0 = Disabled, 1= Enabled
4	0	Prog_CPU_EN	Programmable CPU frequency enable 0 = Disabled, 1= Enabled
3	0	RESERVED	RESERVED
2	0	RESERVED	RESERVED
1	0	RESERVED	RESERVED
0	0	RESERVED	RESERVED

Table 4. Crystal Recommendations

Frequency (Fund)	Cut	Loading	Load Cap	Drive (max.)	Shunt Cap (max.)	Motional (max.)	Tolerance (max.)	Stability (max.)	Aging (max.)
14.31818 MHz	AT	Parallel	20 pF	0.1 mW	5 pF	0.016 pF	35 ppm	30 ppm	5 ppm

The SL28504-2 requires a Parallel Resonance Crystal. Substituting a series resonance crystal causes the SL28504-2 to operate at the wrong frequency and violates the ppm specification. For most applications there is a 300-ppm frequency shift between series and parallel crystals due to incorrect loading

Crystal Loading

Crystal loading plays a critical role in achieving low ppm performance. To realize low ppm performance, use the total capacitance the crystal sees to calculate the appropriate capacitive loading (CL).

Figure 1 shows a typical crystal configuration using the two trim capacitors. It is important that the trim capacitors are in series with the crystal. It is not true that load capacitors are in parallel with the crystal and are approximately equal to the load capacitance of the crystal.

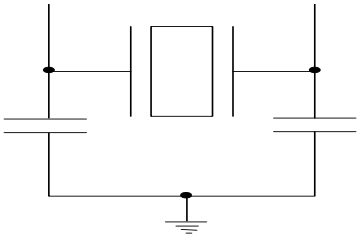

Figure 1. Crystal Capacitive Clarification

Calculating Load Capacitors

In addition to the standard external trim capacitors, consider the trace capacitance and pin capacitance to calculate the crystal loading correctly. Again, the capacitance on each side is in series with the crystal. The total capacitance on both side is twice the specified crystal load capacitance (CL). Trim capacitors are calculated to provide equal capacitive loading on both sides.

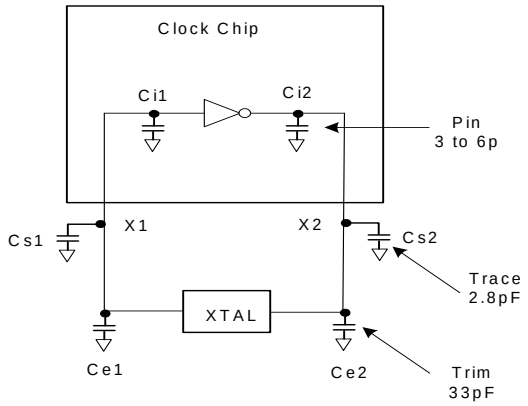

Figure 2. Crystal Loading Example

Use the following formulas to calculate the trim capacitor values for Ce1 and Ce2.

Load Capacitance (each side)

$$Ce = 2 * CL - (Cs + Ci)$$

Total Capacitance (as seen by the crystal)

$$CLe = \frac{1}{\left(\frac{1}{Ce1 + Cs1 + Ci1} + \frac{1}{Ce2 + Cs2 + Ci2}\right)}$$

CL.....Crystal load capacitance

CLe..... Actual loading seen by crystal using standard value trim capacitors

Ce..... External trim capacitors

Cs.....Stray capacitance (terraced)

Ci .....Internal capacitance (lead frame, bond wires, etc.)

Dial-A-Frequency® (CPU and PCIEX)

This feature allows the user to over-clock their system by slowly stepping up the CPU or SRC frequency. When the programmable output frequency feature is enabled, the CPU and SRC frequencies are determined by the following equation:

Fcpu = G * N/M or Fcpu=G2 * N, where G2 = G / M.

- "N" and "M" are the values programmed in Programmable Frequency Select N-Value Register and M-Value Register, respectively.
- "G" stands for the PLL Gear Constant, which is determined by the programmed value of FS[E:A]. See *Table* , *Frequency Select Table* for the Gear Constant for each Frequency selection. The PCI Express only allows user control of the N register, the M value is fixed and documented in *Table* , *Frequency Select Table*.

In this mode, the user writes the desired N and M values into the DAF I2C registers. The user cannot change only the M value and must change both the M and the N values at the same time, if they require a change to the M value. The user may change only the N value.

Associated Register Bits

- *CPU_DAF Enable* – This bit enables CPU DAF mode. By default, it is not set. When set, the operating frequency is determined by the values entered into the CPU_DAF_N register. Note that the CPU_DAF_N and M register must contain valid values before CPU_DAF is set. Default = 0, (No DAF).
- *CPU_DAF_N* – There are nine bits (for 512 values) to linearly change the CPU frequency (limited by VCO range). Default = 0, (0000). The allowable values for N are detailed in *Table* , *Frequency Select Table*.
- *CPU DAF M* – There are 7 bits (for 128 values) to linearly change the CPU frequency (limited by VCO range). Default = 0, the allowable values for M are detailed in *Table* , *Frequency Select Table*
- *SRC_DAF Enable* – This bit enables SRC DAF mode. By default, it is not set. When set, the operating frequency is determined by the values entered into the SRC_DAF_N register. Note that the SRC_DAF_N register must contain valid values before SRC_DAF is set. Default = 0, (No DAF).
- *SRC_DAF_N* – There are nine bits (for 512 values) to linearly change the CPU frequency (limited by VCO range). Default = 0, (0000). The allowable values for N are detailed in *Table* , *Frequency Select Table*.

Smooth Switching

The device contains one smooth switch circuit that is shared by the CPU PLL and SRC PLL. The smooth switch circuit ensures that when the output frequency changes by overclocking, the transition from the old frequency to the new frequency is a slow, smooth transition containing no glitches. The rate of change of output frequency when using the smooth switch circuit is less than 1 MHz/0.667 µs. The frequency overshoot and undershoot is less than 2%.

The Smooth Switch circuit assigns auto or manual. In Auto mode, clock generator assigns smooth switch automatically when the PLL does overclocking. For manual mode, assign the smooth switch circuit to PLL via Smbus. By default the smooth switch circuit is set to auto mode. PLL can be over-clocked when it does not have control of the smooth switch circuit but it is not guaranteed to transition to the new frequency without large frequency glitches.

Do not enable over-clocking and change the N values of both PLLs in the same SMBUS block write and use smooth switch mechanism on spread spectrum on/off.

PD_RESTORE

If a '0' is set for Byte 0 bit 0 then, upon assertion of PWRDWN# LOW, the SL28504-2 initiates a full reset. The result of this is that the clock chip emulates a cold power on start and goes to the "Latches Open" state. If the PD_RESTORE bit is set to a '1' then the configuration is stored upon PWRDWN# asserted LOW. Note that if the iAMT bit, Byte 0 bit 3, is set to a '1' then the PD_RESTORE bit must be ignored. In other words, in Intel iAMT mode, PWRDWN# reset is not allowed.

PWRDWN# (Power down) Clarification

The CKPWRGD/PWRDWN# pin is a dual-function pin. During initial power up, the pin functions as CKPWRGD. Once CKPWRGD has been sampled HIGH by the clock chip, the pin assumes PD# functionality. The PD# pin is an asynchronous active LOW input used to shut off all clocks cleanly before shutting off power to the device. This signal is synchronized internally to the device before powering down the clock synthesizer. PD# is also an asynchronous input for powering up the system. When PD# is asserted LOW, clocks are driven to a LOW value and held before turning off the VCOs and the crystal oscillator.

PWRDWN# (Power down) Assertion

When PD is sampled HIGH by two consecutive rising edges of CPUC, all single-ended outputs will be held LOW on their next HIGH-to-LOW transition and differential clocks must held LOW. When PD mode is desired as the initial power on state, PD must be asserted HIGH in less than 10 µs after asserting CKPWRGD.

PWRDWN# Deassertion

The power up latency is less than 1.8 ms. This is the time from the deassertion of the PD# pin or the ramping of the power supply until the time that stable clocks are generated from the clock chip. All differential outputs stopped in a three-state condition, resulting from power down are driven high in less than 300 µs of PD# deassertion to a voltage greater than 200 mV. After the clock chip's internal PLL is powered up and locked, all outputs are enabled within a few clock cycles of each clock. *Figure 4* is an example showing the relationship of clocks coming up.

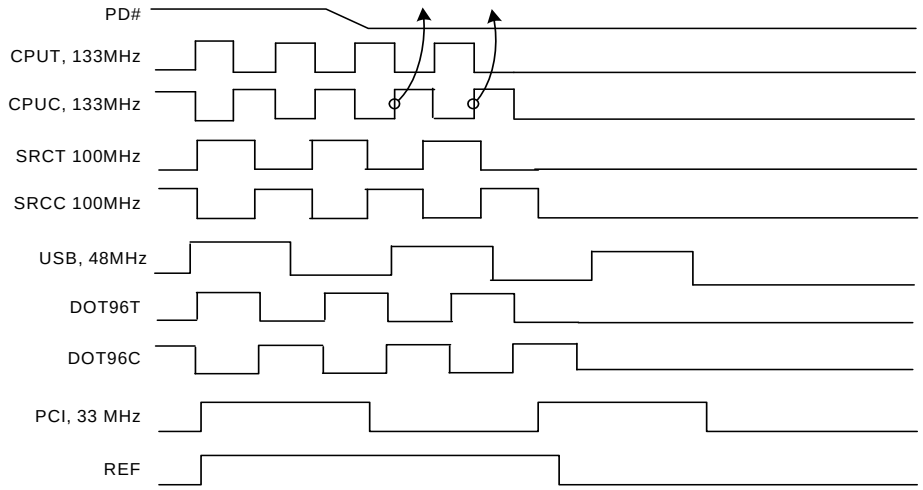

Figure 3. Power down Assertion Timing Waveform

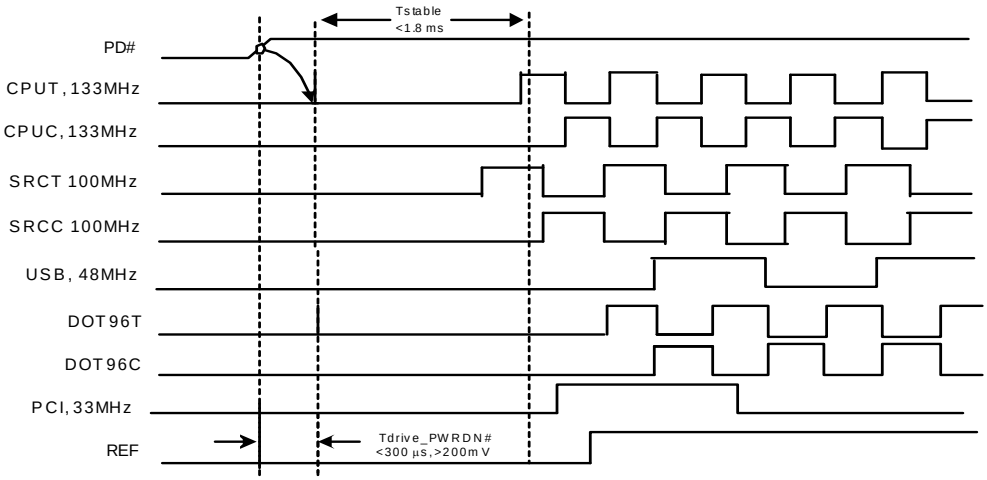

Figure 4. Power down Deassertion Timing Waveform

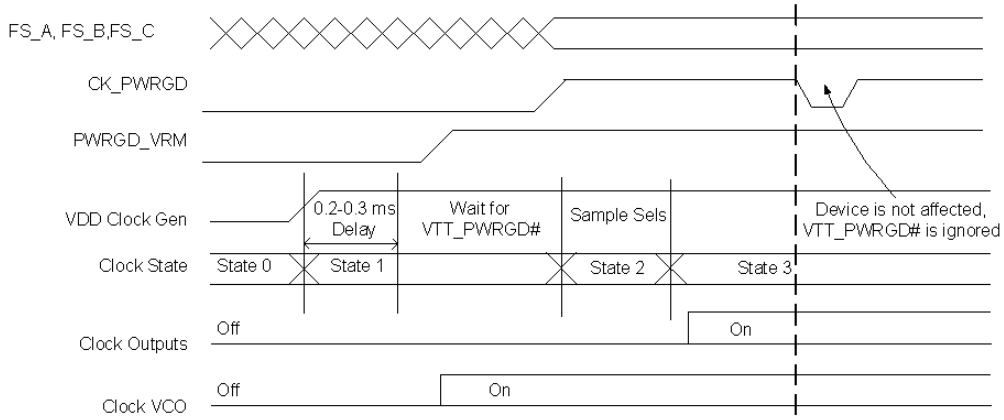

Figure 5. CK_PWRGD Timing Diagram

CPU_STP# Assertion

The CPU_STP# signal is an active LOW input used for synchronous stopping and starting the CPU output clocks while the rest of the clock generator continues to function. When the CPU_STP# pin is asserted, all CPU outputs that are set with the SMBus configuration to be stoppable are stopped within two to six CPU clock periods after sampled by two rising edges of the internal CPUC clock. The final states of the stopped CPU signals are CPUT = HIGH and CPUC = LOW.

CPU_STP# Deassertion

The deassertion of the CPU_STP# signal causes all stopped CPU outputs to resume normal operation in a synchronous manner. No short or stretched clock pulses are produced when the clock resumes. The maximum latency from the deassertion to active outputs is no more than two CPU clock cycles.

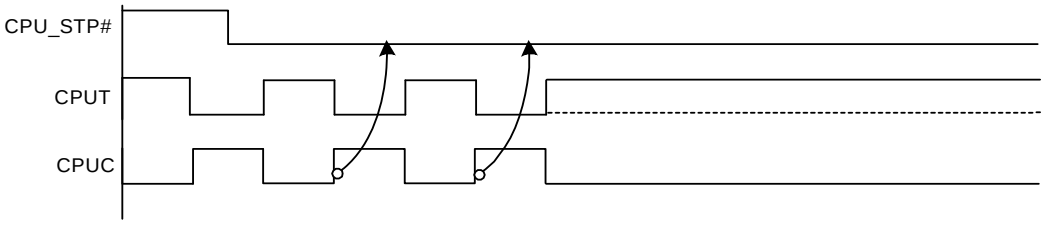

Figure 6. CPU_STP# Assertion Waveform

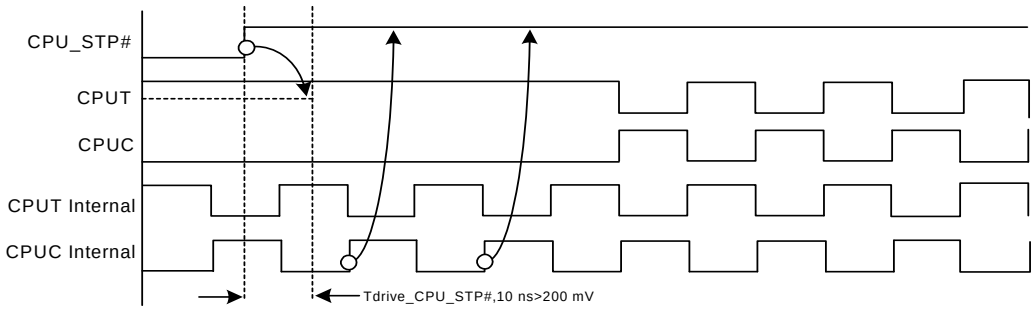

Figure 7. CPU_STP# Deassertion Waveform

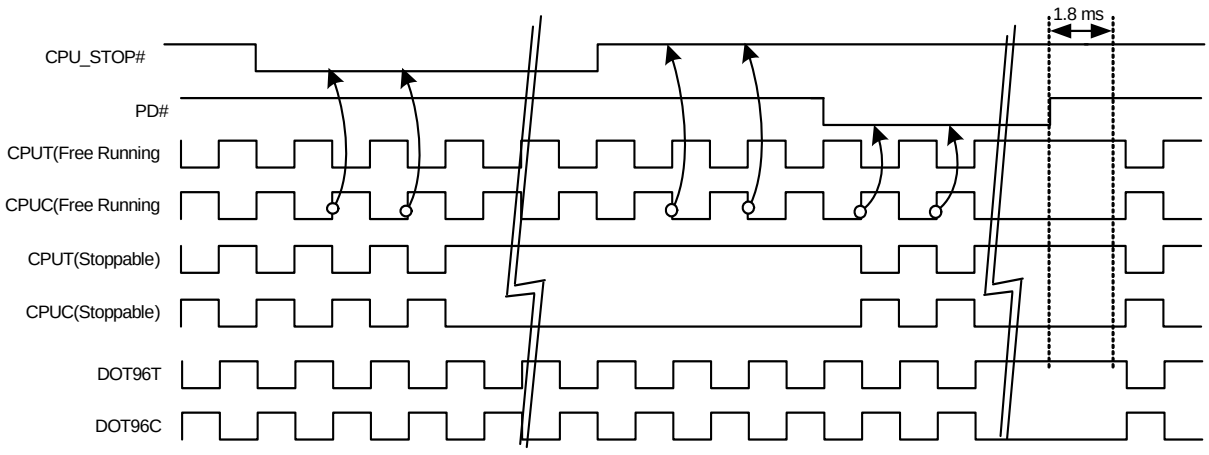

Figure 8. CPU_STP# = Driven, CPU_PD = Driven, DOT_PD = Driven

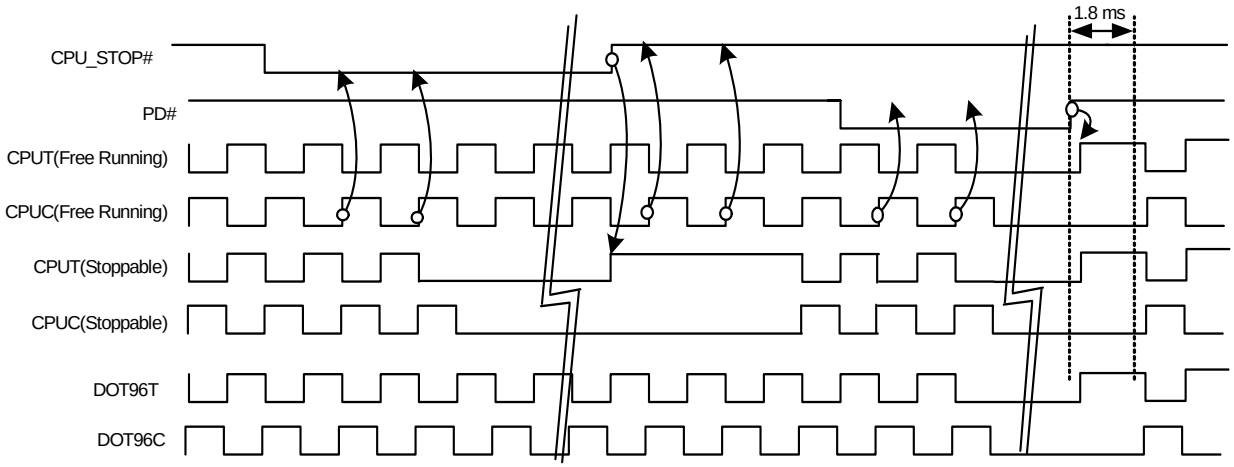

Figure 9. CPU_STP# = Tri-state, CPU_PD = Tri-state, DOT_PD = Tri-state

PCI_STP# Assertion

The PCI_STP# signal is an active LOW input used for synchronously stopping and starting the PCI outputs while the rest of the clock generator continues to function. The set-up time for capturing PCI_STP# going LOW is 10 ns (t_{SU}). (See *Figure 10*.) The PCIF clocks are affected by this pin if their corresponding control bit in the SMBus register is set to allow them to be free running.

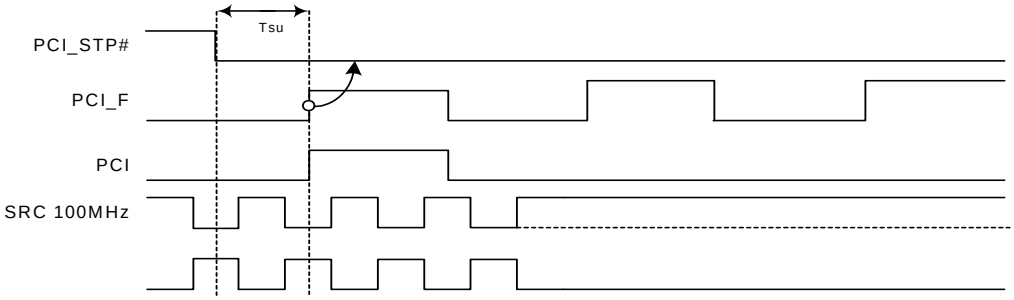

Figure 10. PCI_STP# Assertion Waveform

PCI_STP# Deassertion

The deassertion of the PCI_STP# signal causes all PCI and stoppable PCIF clocks to resume running in a synchronous manner within two PCI clock periods, after PCI_STP# transitions to a HIGH level.

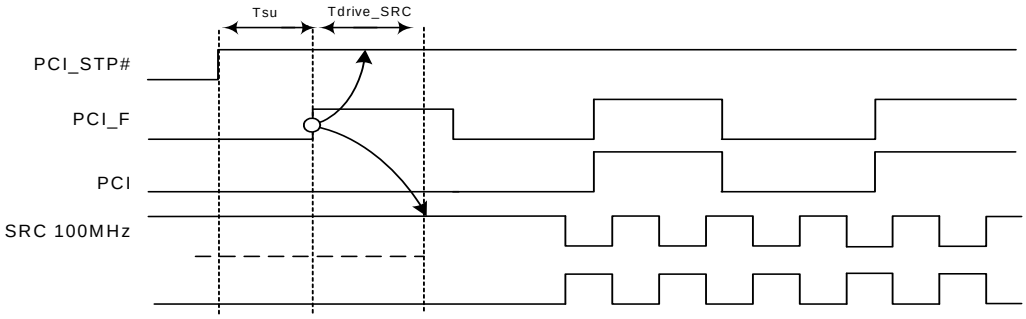

Figure 11. PCI_STP# Deassertion Waveform

Table 5. Output Driver Status during PCI-STOP# and CPU-STOP#

		PCI_STOP# Asserted	CPU_STOP# Asserted	SMBus OE Disabled
Single-ended Clocks	Stoppable	Driven low	Running	Driven low
	Non stoppable	Running	Running	
Differential Clocks	Stoppable	Clock driven high	Clock driven high	Clock driven Low or 20K pulldown
		Clock# driven low	Clock# driven low	
	Non stoppable	Running	Running	

Table 6. Output Driver Status

	All Single-ended Clocks		All Differential Clocks except CPU1		CPU1	
	w/o Strap	w/ Strap	Clock	Clock#	Clock	Clock#
Latches Open State	Low	Hi-z	Low or 20K pulldown	Low	Low or 20K pulldown	Low
Powerdown	Low	Hi-z	Low or 20K pulldown	Low	Low or 20K pulldown	Low
M1	Low	Hi-z	Low or 20K pulldown	Low	Running	Running

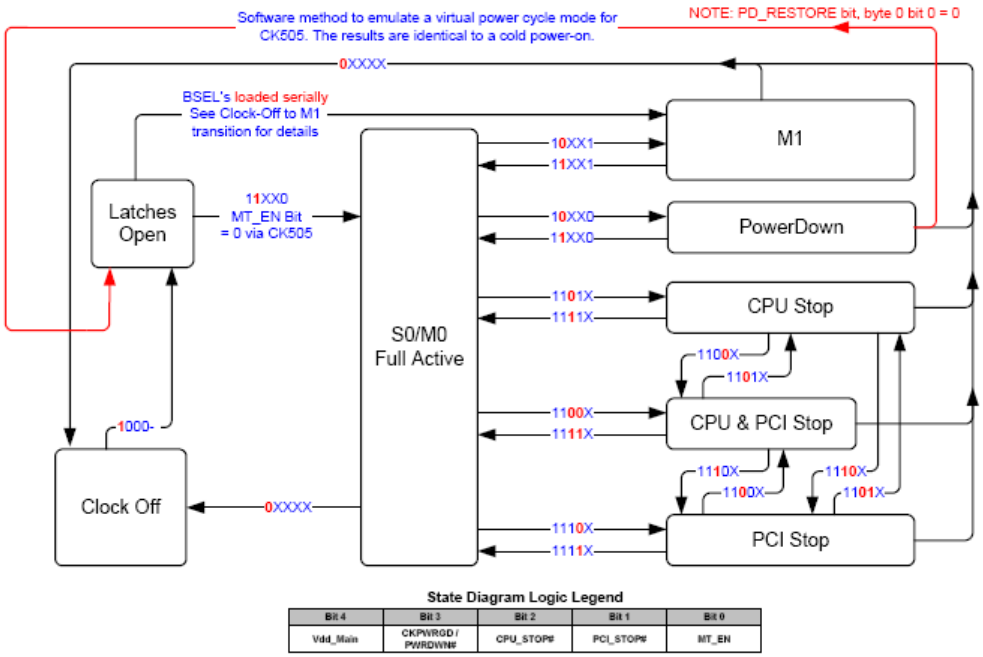

Figure 12. Clock Generator Power up/Run State Diagram

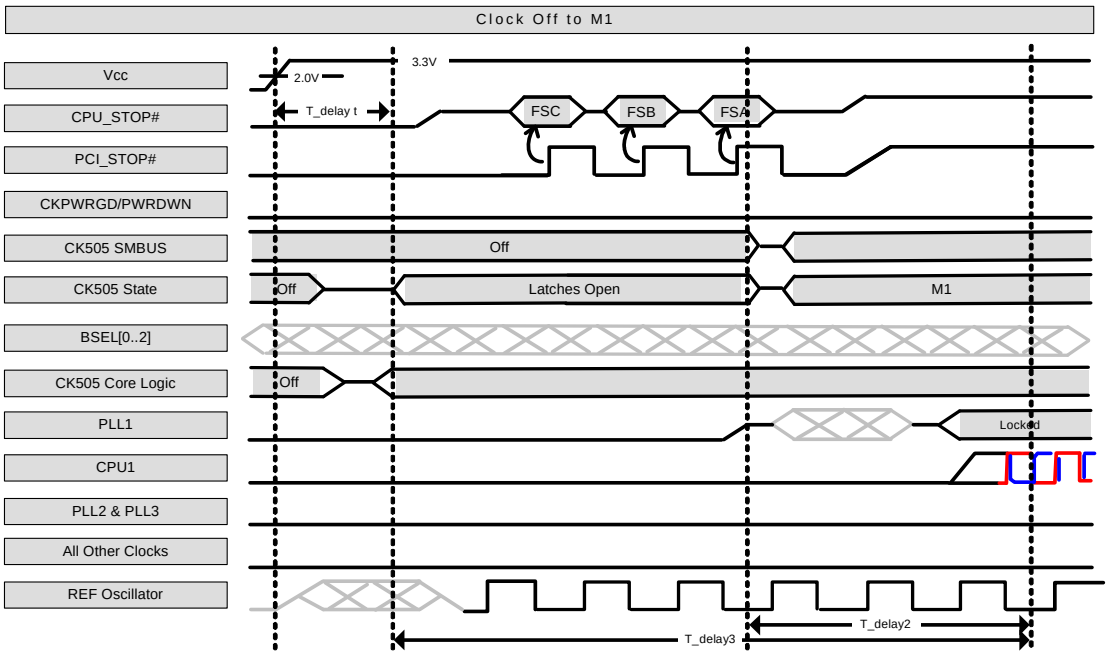

Figure 13. BSEL Serial Latching

Absolute Maximum Conditions

Parameter	Description	Condition	Min.	Max.	Unit
V_{DD}	Core Supply Voltage		–	4.6	V
V_{DD_A}	Analog Supply Voltage		–	4.6	V
V_{DD_IO}	IO Supply Voltage			1.5	V
V_{IN}	Input Voltage	Relative to V_{SS}	–0.5	4.6	V_{DC}
T_S	Temperature, Storage	Non-functional	–65	150	°C
T_A	Temperature, Operating Ambient	Functional	-40	85	°C
T_J	Temperature, Junction	Functional	–	150	°C
$Ø_{JC}$	Dissipation, Junction to Case	Mil-STD-883E Method 1012.1	–	20	°C/W
$Ø_{JA}$	Dissipation, Junction to Ambient	JEDEC (JESD 51)	–	60	°C/W
ESD_{HBM}	ESD Protection (Human Body Model)	MIL-STD-883, Method 3015	2000	–	V
UL-94	Flammability Rating	At 1/8 in.	V–0		
MSL	Moisture Sensitivity Level		1		

Multiple Supplies: The Voltage on any input or I/O pin cannot exceed the power pin during power-up. Power supply sequencing is NOT required.

DC Electrical Specifications

Parameter	Description	Condition	Min.	Max.	Unit
VDD core	3.3V Operating Voltage	3.3 ± 5%	3.135	3.465	V
V_{IH}	3.3V Input High Voltage (SE)		2.0	V_{DD} + 0.3	V
V_{IL}	3.3V Input Low Voltage (SE)		V_{SS} – 0.3	0.8	V
V_{IHI2C}	Input High Voltage	SDATA, SCLK	2.2	–	V
V_{ILI2C}	Input Low Voltage	SDATA, SCLK	–	1.0	V
V_{IH_FS}	FS_[A,B] Input High Voltage		0.7	1.5	V
V_{IL_FS}	FS_[A,B] Input Low Voltage		V_{SS} – 0.3	0.35	V
$V_{IHFS_C_TEST}$	FS_C, SEL_24.576M Input High Voltage		2	V_{DD} + 0.3	V
$V_{IMFS_C_NORMAL}$	FS_C, SEL_24.576M Input Middle Voltage		0.7	2	V
$V_{ILFS_C_NORMAL}$	FS_C, SEL_24.576M Input Low Voltage		V_{SS} – 0.3	0.35	V
I_{IH}	Input High Leakage Current	Except internal pull-down resistors, $0 < V_{IN} < V_{DD}$	–	5	µA
SEL_24.576M_HIGH	SEL_24.576M Input High Voltage	Typ. 2.75V	2.40	VDD	V
SEL_24.576M_MID	SEL_24.576M Input Mid Voltage	Typ. 1.65V	1.30	2.00	V
SEL_24.576M_LOW	SEL_24.576M Input Low Voltage	Typ. 0.550V	0	0.900	V
I_{IL}	Input Low Leakage Current	Except internal pull-up resistors, $0 < V_{IN} < V_{DD}$	–5	–	µA
V_{OH}	3.3V Output High Voltage (SE)	I_{OH} = –1 mA	2.4	–	V
V_{OL}	3.3V Output Low Voltage (SE)	I_{OL} = 1 mA	–	0.4	V
$V_{DD\ IO}$	Low Voltage IO Supply Voltage		1	3.465	
V_{OH}	3.3V Input High Voltage (DIFF)		0.70	0.90	V
V_{OL}	3.3V Input Low Voltage (DIFF)			0.40	V

DC Electrical Specifications

Parameter	Description	Condition	Min.	Max.	Unit
I_{OZ}	High-impedance Output Current		–10	10	µA
C_{IN}	Input Pin Capacitance		1.5	5	pF
C_{OUT}	Output Pin Capacitance			6	pF
L_{IN}	Pin Inductance		–	7	nH
V_{XIH}	Xin High Voltage		$0.7V_{DD}$	V_{DD}	V
V_{XIL}	Xin Low Voltage		0	$0.3V_{DD}$	V
$I_{DD3.3V}$	Dynamic Supply Current		–	250	mA

AC Electrical Specifications

Parameter	Description	Condition	Min.	Max.	Unit
Crystal					
T_{DC}	XIN Duty Cycle	The device operates reliably with input duty cycles up to 30/70 but the REF clock duty cycle will not be within specification	47.5	52.5	%
T_{PERIOD}	XIN Period	When XIN is driven from an external clock source	69.841	71.0	ns
T_R/T_F	XIN Rise and Fall Times	Measured between $0.3V_{DD}$ and $0.7V_{DD}$	–	10.0	ns
T_{CCJ}	XIN Cycle to Cycle Jitter	As an average over 1-µs duration	–	500	ps
CPU at 0.7V					
T_{DC}	CPUT and CPUC Duty Cycle	Measured at 0V differential at 0.1s	45	55	%
T_{PERIOD}	100 MHz CPUT and CPUC Period	Measured at 0V differential at 0.1s	9.99900	10.0100	ns
T_{PERIOD}	133 MHz CPUT and CPUC Period	Measured at 0V differential at 0.1s	7.49925	7.50075	ns
T_{PERIOD}	166 MHz CPUT and CPUC Period	Measured at 0V differential at 0.1s	5.99940	6.00060	ns
T_{PERIOD}	200 MHz CPUT and CPUC Period	Measured at 0V differential at 0.1s	4.99950	5.00050	ns
T_{PERIOD}	266 MHz CPUT and CPUC Period	Measured at 0V differential at 0.1s	3.74963	3.75038	ns
T_{PERIOD}	333 MHz CPUT and CPUC Period	Measured at 0V differential at 0.1s	2.99970	3.00030	ns
T_{PERIOD}	400 MHz CPUT and CPUC Period	Measured at 0V differential at 0.1s	2.49975	2.50025	ns
$T_{PERIODSS}$	100 MHz CPUT and CPUC Period, SSC	Measured at 0V differential at 0.1s	10.02406	10.02607	ns
$T_{PERIODSS}$	133 MHz CPUT and CPUC Period, SSC	Measured at 0V differential at 0.1s	7.51804	7.51955	ns
$T_{PERIODSS}$	166 MHz CPUT and CPUC Period, SSC	Measured at 0V differential at 0.1s	6.01444	6.01564	ns
$T_{PERIODSS}$	200 MHz CPUT and CPUC Period, SSC	Measured at 0V differential at 0.1s	5.01203	5.01303	ns
$T_{PERIODSS}$	266 MHz CPUT and CPUC Period, SSC	Measured at 0V differential at 0.1s	3.75902	3.75978	ns
$T_{PERIODSS}$	333 MHz CPUT and CPUC Period, SSC	Measured at 0V differential at 0.1s	3.00722	3.00782	ns
$T_{PERIODSS}$	400 MHz CPUT and CPUC Period, SSC	Measured at 0V differential at 0.1s	2.50601	2.50652	ns
$T_{PERIODAbs}$	100 MHz CPUT and CPUC Absolute period	Measured at 0V differential at 1 clock	9.91400	10.0860	ns
$T_{PERIODAbs}$	133 MHz CPUT and CPUC Absolute period	Measured at 0V differential at 1 clock	7.41425	7.58575	ns
$T_{PERIODAbs}$	166 MHz CPUT and CPUC Absolute period	Measured at 0V differential @ 1 clock	5.91440	6.08560	ns
$T_{PERIODAbs}$	200 MHz CPUT and CPUC Absolute period	Measured at 0V differential @ 1 clock	4.91450	5.08550	ns
$T_{PERIODAbs}$	266 MHz CPUT and CPUC Absolute period	Measured at 0V differential @ 1 clock	3.66463	3.83538	ns
$T_{PERIODAbs}$	333 MHz CPUT and CPUC Absolute period	Measured at 0V differential @ 1 clock	2.91470	3.08530	ns
$T_{PERIODAbs}$	400 MHz CPUT and CPUC Absolute period	Measured at 0V differential @ 1 clock	2.41475	2.58525	ns
$T_{PERIODSSAbs}$	100 MHz CPUT and CPUC Absolute period, SSC	Measured at 0V differential @ 1 clock	9.91406	10.1362	ns
$T_{PERIODSSAbs}$	133 MHz CPUT and CPUC Absolute period, SSC	Measured at 0V differential @ 1 clock	7.41430	7.62340	ns
$T_{PERIODSSAbs}$	166 MHz CPUT and CPUC Absolute period, SSC	Measured at 0V differential @ 1 clock	5.91444	6.11572	ns
$T_{PERIODSSAbs}$	200 MHz CPUT and CPUC Absolute period, SSC	Measured at 0V differential @ 1 clock	4.91453	5.11060	ns
$T_{PERIODSSAbs}$	266 MHz CPUT and CPUC Absolute period, SSC	Measured at 0V differential @ 1 clock	3.66465	3.85420	ns

AC Electrical Specifications (continued)

Parameter	Description	Condition	Min.	Max.	Unit
$T_{PERIODSSAbs}$	333 MHz CPUT and CPUC Absolute period, SSC	Measured at 0V differential @ 1 clock	2.91472	3.10036	ns
$T_{PERIODSSAbs}$	400 MHz CPUT and CPUC Absolute period, SSC	Measured at 0V differential @ 1 clock	2.41477	2.59780	ns
T_{CCJ}	CPU Cycle to Cycle Jitter	Measured at 0V differential	–	85	ps
T_{CCJ2}	CPU2_ITP Cycle to Cycle Jitter	Measured at 0V differential	–	125	ps
L_{ACC}	Long-term Accuracy	Measured at 0V differential	–	100	ppm
T_{SKEW}	CPU0 to CPU1 Clock Skew	Measured at 0V differential	–	100	ps
T_{SKEW2}	CPU2_ITP to CPU0 Clock Skew	Measured at 0V differential	–	150	ps
T_R / T_F	CPU Rising/Falling Slew rate	Measured differentially from ±150 mV	2.5	8	V/ns
T_{RFM}	Rise/Fall Matching	Measured single-endedly from ±75 mV	–	20	%
V_{HIGH}	Voltage High			1.15	V
V_{LOW}	Voltage Low		–0.3	–	V
V_{OX}	Crossing Point Voltage at 0.7V Swing		300	550	mV
SRC at 0.7V					
T_{DC}	SRC Duty Cycle	Measured at 0V differential	45	55	%
T_{PERIOD}	100 MHz SRC Period	Measured at 0V differential @ 0.1s	9.99900	10.0010	ns
$T_{PERIODSS}$	100 MHz SRC Period, SSC	Measured at 0V differential @ 0.1s	10.02406	10.02607	ns
$T_{PERIODAbs}$	100 MHz SRC Absolute Period	Measured at 0V differential @ 1 clock	9.87400	10.1260	ns
$T_{PERIODSSAbs}$	100 MHz SRC Absolute Period, SSC	Measured at 0V differential @ 1 clock	9.87406	10.1762	ns
$T_{SKEW(window)}$	Any SRC Clock Skew from the earliest bank to the latest bank	Measured at 0V differential	–	3.0	ns
T_{CCJ}	SRC Cycle to Cycle Jitter	Measured at 0V differential	–	125	ps
L_{ACC}	SRC Long Term Accuracy	Measured at 0V differential	–	100	ppm
T_R / T_F	SRC Rising/Falling Slew Rate	Measured differentially from ±150 mV	2.5	8	V/ns
T_{RFM}	Rise/Fall Matching	Measured single-endedly from ±75 mV	–	20	%
V_{HIGH}	Voltage High			1.15	V
V_{LOW}	Voltage Low		–0.3	–	V
V_{OX}	Crossing Point Voltage at 0.7V Swing		300	550	mV
DOT96 at 0.7V					
T_{DC}	DOT96 Duty Cycle	Measured at 0V differential	45	55	%
T_{PERIOD}	DOT96 Period	Measured at 0V differential at 0.1s	10.4156	10.4177	ns
$T_{PERIODAbs}$	DOT96 Absolute Period	Measured at 0V differential at 0.1s	10.1656	10.6677	ns
T_{CCJ}	DOT96 Cycle to Cycle Jitter	Measured at 0V differential at 1 clock	–	250	ps
L_{ACC}	DOT96 Long Term Accuracy	Measured at 0V differential at 1 clock	–	100	ppm
T_R / T_F	DOT96 Rising/Falling Slew Rate	Measured differentially from ±150 mV	2.5	8	V/ns
T_{RFM}	Rise/Fall Matching	Measured single-endedly from ±75 mV	–	20	%
V_{HIGH}	Voltage High			1.15	V
V_{LOW}	Voltage Low		–0.3	–	V
V_{OX}	Crossing Point Voltage at 0.7V Swing		300	550	mV
T_{RFM}	Rise/Fall Matching	Measured single-endedly from ±75 mV	–	20	%
V_{HIGH}	Voltage High			1.15	V
V_{LOW}	Voltage Low		–0.3	–	V
V_{OX}	Crossing Point Voltage at 0.7V Swing		300	550	mV
PCI/PCIF at 3.3V					

AC Electrical Specifications (continued)

Parameter	Description	Condition	Min.	Max.	Unit
T_{DC}	PCI Duty Cycle	Measurement at 1.5V	45	55	%
T_{PERIOD}	Spread Disabled PCIF/PCI Period	Measurement at 1.5V	29.99700	30.00300	ns
$T_{PERIODSS}$	Spread Enabled PCIF/PCI Period	Measurement at 1.5V	30.08421	30.23459	ns
$T_{PERIODAbs}$	Spread Disabled PCIF/PCI Period	Measurement at 1.5V	29.49700	30.50300	ns
$T_{PERIODSSAbs}$	Spread Enabled PCIF/PCI Period	Measurement at 1.5V	29.56617	30.58421	ns
T_{HIGH}	Spread Enabled PCIF and PCI high time	Measurement at 2V	12.27095	16.27995	ns
T_{LOW}	Spread Enabled PCIF and PCI low time	Measurement at 0.8V	11.87095	16.07995	ns
T_{HIGH}	Spread Disabled PCIF and PCI high time	Measurement at 2.V	12.27365	16.27665	ns
T_{LOW}	Spread Disabled PCIF and PCI low time	Measurement at 0.8V	11.87365	16.07665	ns
T_R / T_F	PCIF/PCI Rising/Falling Slew Rate	Measured between 0.8V and 2.0V	1.0	4.0	V/ns
T_{SKEW}	Any PCI clock to Any PCI clock Skew	Measurement at 1.5V	–	1000	ps
T_{CCJ}	PCIF and PCI Cycle to Cycle Jitter	Measurement at 1.5V	–	500	ps
L_{ACC}	PCIF/PCI Long Term Accuracy	Measurement at 1.5V	–	100	ppm
48_M at 3.3V					
T_{DC}	Duty Cycle	Measurement at 1.5V	45	55	%
T_{PERIOD}	Period	Measurement at 1.5V	20.83125	20.83542	ns
$T_{PERIODAbs}$	Absolute Period	Measurement at 1.5V	20.48125	21.18542	ns
T_{HIGH}	48_M High time	Measurement at 2V	8.216563	11.15198	ns
T_{LOW}	48_M Low time	Measurement at 0.8V	7.816563	10.95198	ns
T_R / T_F	Rising and Falling Edge Rate	Measured between 0.8V and 2.0V	1.0	2.0	V/ns
T_{CCJ}	Cycle to Cycle Jitter	Measurement at 1.5V	–	350	ps
L_{ACC}	48M Long Term Accuracy	Measurement at 1.5V	–	100	ppm
25_M					
T_{DC}	Duty Cycle	Measurement at 1.5V	45	55	%
T_{PERIOD}	Period	Measurement at 1.5V	39.996	40.004	ns
T_R/T_F	Rising and Falling Edge Rate	Measured between 0.8V and 2.0V	1.0	4.0	V/ns
T_{CCJ}	Cycle to Cycle Jitter	Measurement at 1.5V	–	500	ps
L_{ACC}	25M Long Term Accuracy	Measurement at 1.5V	–	50	ppm
1394A - 24.576M					
T_{DC}	Duty Cycle	Measurement at 1.5V	45	55	%
T_{PERIOD}	Period	Measurement at 1.5V	40.686	40.694	ns
T_R/T_F	Rising and Falling Edge Rate	Measured between 0.8V and 2.0V	1.0	4.0	V/ns
T_{CCJ}	Cycle to Cycle Jitter	Measurement at 1.5V	–	200	ps
L_{ACC}	24M Long Term Accuracy	Measurement at 1.5V	–30	30	ppm
REF					
T_{DC}	REF Duty Cycle	Measurement at 1.5V	45	55	%
T_{PERIOD}	REF Period	Measurement at 1.5V	69.82033	69.86224	ns
$T_{PERIODAbs}$	REF Absolute Period	Measurement at 1.5V	68.83429	70.84826	ns
T_{HIGH}	REF High time	Measurement at 2V	29.97543	38.46654	ns
T_{LOW}	REF Low time	Measurement at 0.8V	29.57543	38.26654	ns
T_R / T_F	REF Rising and Falling Edge Rate	Measured between 0.8V and 2.0V	1.0	4.0	V/ns
T_{SKEW}	REF Clock to REF Clock	Measurement at 1.5V	–	500	ps

AC Electrical Specifications (continued)

Parameter	Description	Condition	Min.	Max.	Unit
T_{CCJ}	REF Cycle to Cycle Jitter	Measurement at 1.5V	–	1000	ps
L_{ACC}	Long Term Accuracy	Measurement at 1.5V	–	100	ppm
ENABLE/DISABLE and SET-UP					
T_{STABLE}	Clock Stabilization from Power-up		–	1.8	ms
T_{SS}	Stopclock Set-up Time		10.0	–	ns

Test and Measurement Set-up

For PCI Single-ended Signals and Reference

The following diagram shows the test load configurations for the single-ended PCI, USB, and REF output signals.

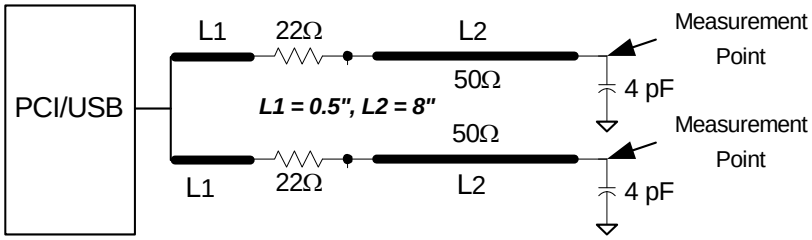

Figure 14. Single-ended PCI and USB Double Load Configuration

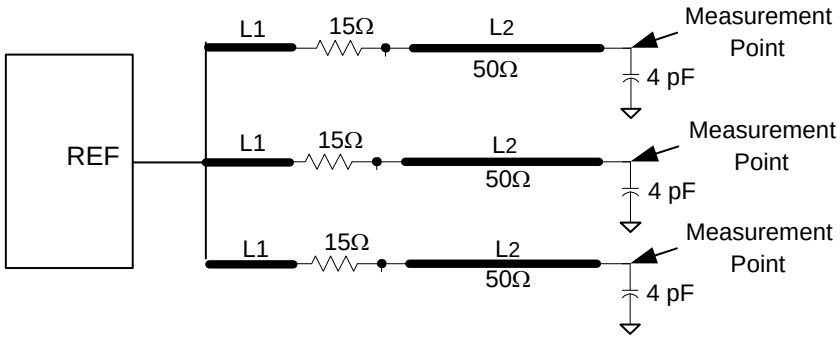

Figure 15. Single-ended REF Triple Load Configuration

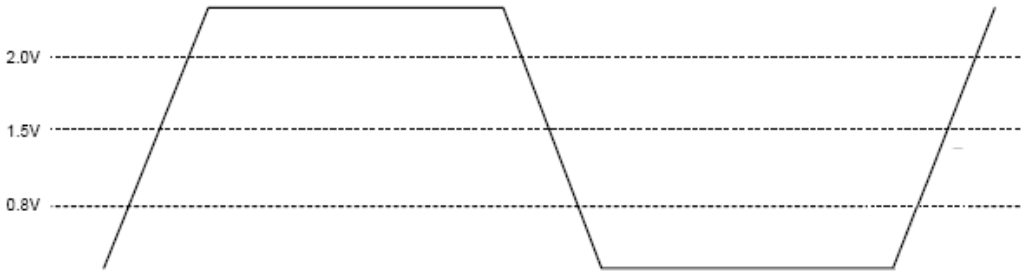

Figure 16. Single-ended Output Signals (for AC Parameters Measurement)

For CPU, SRC, and DOT96 Signals and Reference

This diagram shows the test load configuration for the differential CPU and SRC outputs

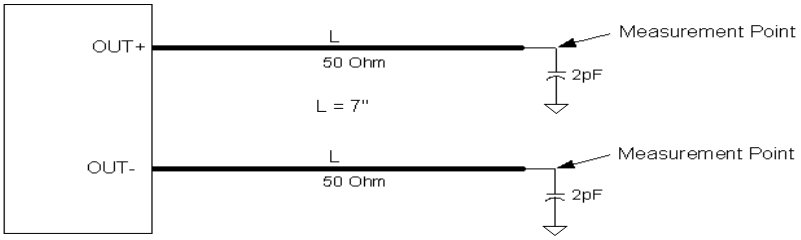

Figure 17. 0.7V Differential Load Configuration

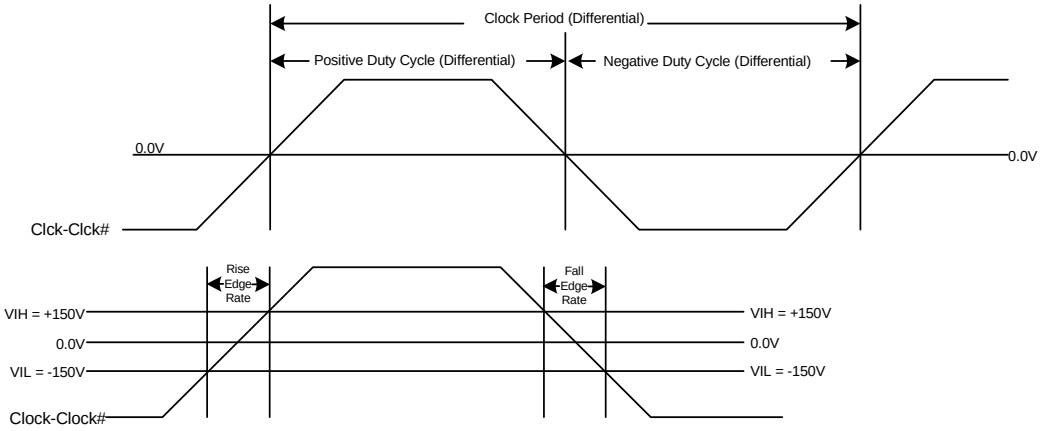

Figure 18. Differential Measurement for Differential Output Signals (for AC Parameters Measurement)

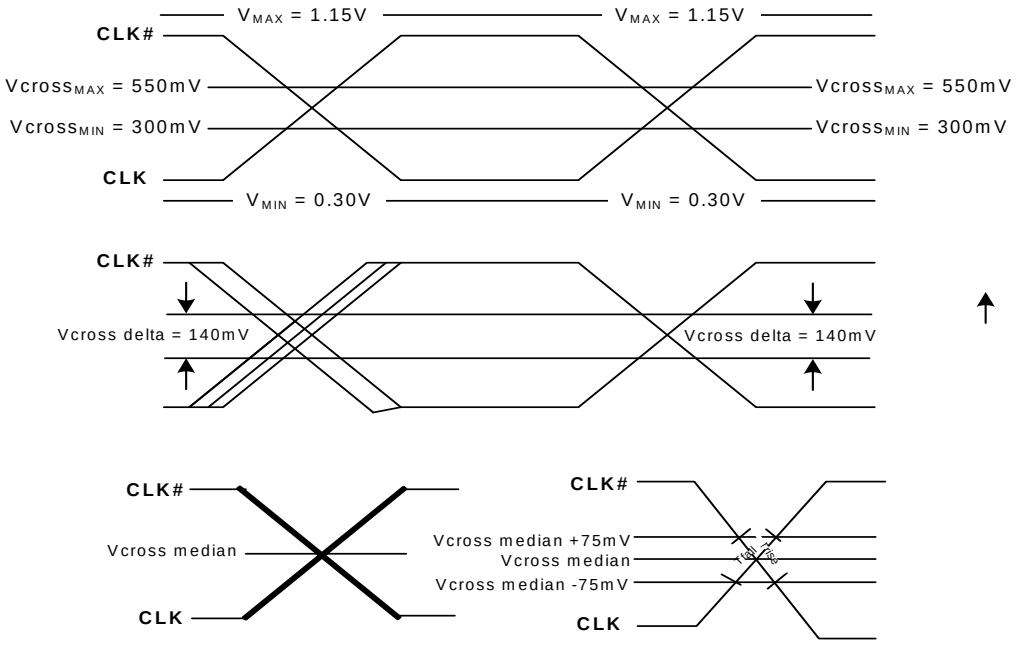

Figure 19. Single-ended Measurement for Differential Output Signals (for AC Parameters Measurement)

Ordering Information

Part Number	Package Type	Product Flow
Lead-free		
SL28504BZC-2	56-pin TSSOP	Commercial, 0° to 85°C
SL28504BZC-2T	56-pin TSSOP–Tape and Reel	Commercial, 0° to 85°C
SL28504BZI-2	56-pin TSSOP	Commercial, -40° to 85°C
SL28504BZI-2T	56-pin TSSOP–Tape and Reel	Commercial, -40° to 85°C

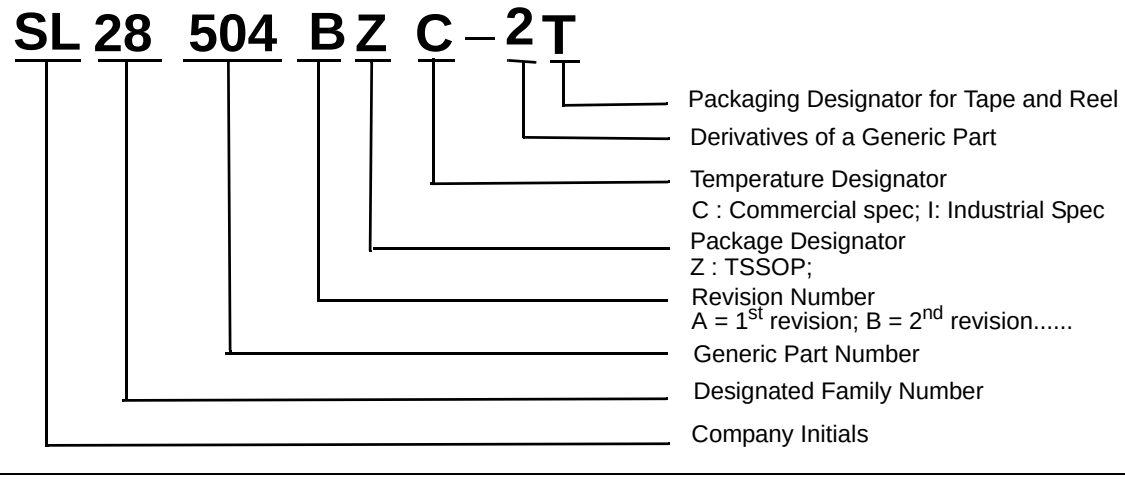

Package Diagrams

56-Lead Thin Shrunk Small Outline Package Type II (6 mm x 12 mm) Z56

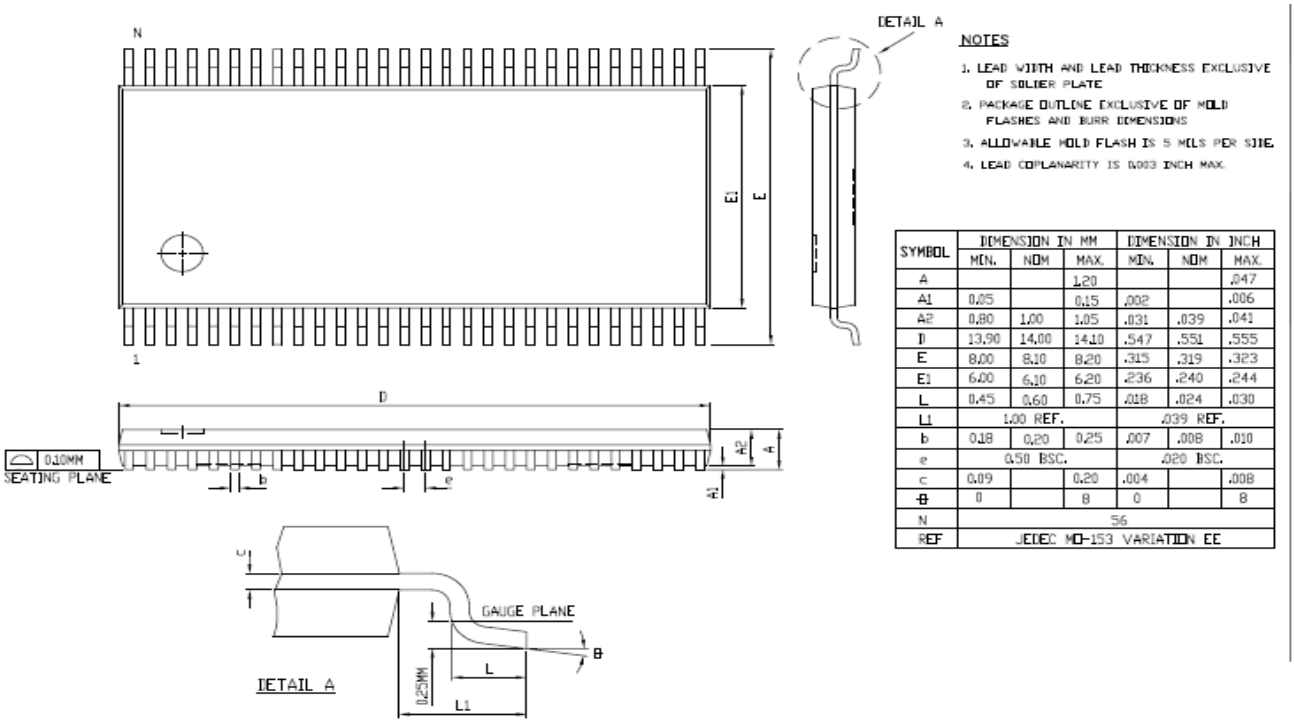

NOTES

1. LEAD WIDTH AND LEAD THICKNESS EXCLUSIVE OF SOLDER PLATE
2. PACKAGE OUTLINE EXCLUSIVE OF MOLD FLASHES AND BURR DIMENSIONS
3. ALLOWABLE MOLD FLASH IS 5 MILS PER SIDE.
4. LEAD COPLANARITY IS 0.003 INCH MAX.

SYMBOL	DIMENSION IN MM			DIMENSION IN INCH		
	MIN.	NOM	MAX.	MIN.	NOM	MAX.
A			1.20			.047
A1	0.05		0.15	.002		.006
A2	0.80	1.00	1.05	.031	.039	.041
D	13.90	14.00	14.10	.547	.551	.555
E	8.00	8.10	8.20	.315	.319	.323
E1	6.00	6.10	6.20	.236	.240	.244
L	0.45	0.60	0.75	.018	.024	.030
L1	1.00 REF.			.039 REF.		
b	0.18	0.20	0.25	.007	.008	.010
e	0.50 BSC.			.020 BSC.		
c	0.09		0.20	.004		.008
θ	0		8	0		8
N	56					
REF	JEDEC MO-153 VARIATION EE					

Document History Page

Document Title: SL28504-2 Clock Generator for Intel®Eaglelake Chipset DOC #: SP-AP-0051 (Rev. AA)				
REV.	**ECR#**	**Issue Date**	**Orig. of Change**	**Description of Change**
1.0		10/5/07	BSHEN	Initial Release
1.1		10/16/07	BSHEN	Add SRC1 to pin 17/18. and tri-level trigger at 24.576M
1.2		01/21/08	BSHEN	1. Change Revision ID Byte7[7:4] to be 0001 2. Updated block diagram 3. Change Byte10[6:2] and Byte11[4] to be reserved
1.3		07/26/09	BSHEN	1. Updated Package Dimensions to compliant to SLI POD specification 2. Updated the CR# pin & register 3. Remove PCIE Gen II compliant on Feature
AA	1575	04/29/09	BSHEN	1. Correct VDD_IO pin description 2. Updated Industrial ordering information 3. Change document format for ISO complaint



ClockBuilder Pro

One-click access to Timing tools, documentation, software, source code libraries & more. Available for Windows and iOS (CBGo only).

www.silabs.com/CBPro

Timing Portfolio
www.silabs.com/timing

SW/HW
www.silabs.com/CBPro

Quality
www.silabs.com/quality

Support and Community
community.silabs.com

Disclaimer
Silicon Laboratories intends to provide customers with the latest, accurate, and in-depth documentation of all peripherals and modules available for system and software implementers using or intending to use the Silicon Laboratories products. Characterization data, available modules and peripherals, memory sizes and memory addresses refer to each specific device, and "Typical" parameters provided can and do vary in different applications. Application examples described herein are for illustrative purposes only. Silicon Laboratories reserves the right to make changes without further notice and limitation to product information, specifications, and descriptions herein, and does not give warranties as to the accuracy or completeness of the included information. Silicon Laboratories shall have no liability for the consequences of use of the information supplied herein. This document does not imply or express copyright licenses granted hereunder to design or fabricate any integrated circuits. The products are not designed or authorized to be used within any Life Support System without the specific written consent of Silicon Laboratories. A "Life Support System" is any product or system intended to support or sustain life and/or health, which, if it fails, can be reasonably expected to result in significant personal injury or death. Silicon Laboratories products are not designed or authorized for military applications. Silicon Laboratories products shall under no circumstances be used in weapons of mass destruction including (but not limited to) nuclear, biological or chemical weapons, or missiles capable of delivering such weapons.

Trademark Information
Silicon Laboratories Inc.® , Silicon Laboratories®, Silicon Labs®, SiLabs® and the Silicon Labs logo®, Bluegiga®, Bluegiga Logo®, Clockbuilder®, CMEMS®, DSPLL®, EFM®, EFM32®, EFR, Ember®, Energy Micro, Energy Micro logo and combinations thereof, "the world's most energy friendly microcontrollers", Ember®, EZLink®, EZRadio®, EZRadioPRO®, Gecko®, ISOmodem®, Precision32®, ProSLIC®, Simplicity Studio®, SiPHY®, Telegesis, the Telegesis Logo®, USBXpress® and others are trademarks or registered trademarks of Silicon Laboratories Inc. ARM, CORTEX, Cortex-M3 and THUMB are trademarks or registered trademarks of ARM Holdings. Keil is a registered trademark of ARM Limited. All other products or brand names mentioned herein are trademarks of their respective holders.

Silicon Laboratories Inc.
400 West Cesar Chavez
Austin, TX 78701
USA

http://www.silabs.com